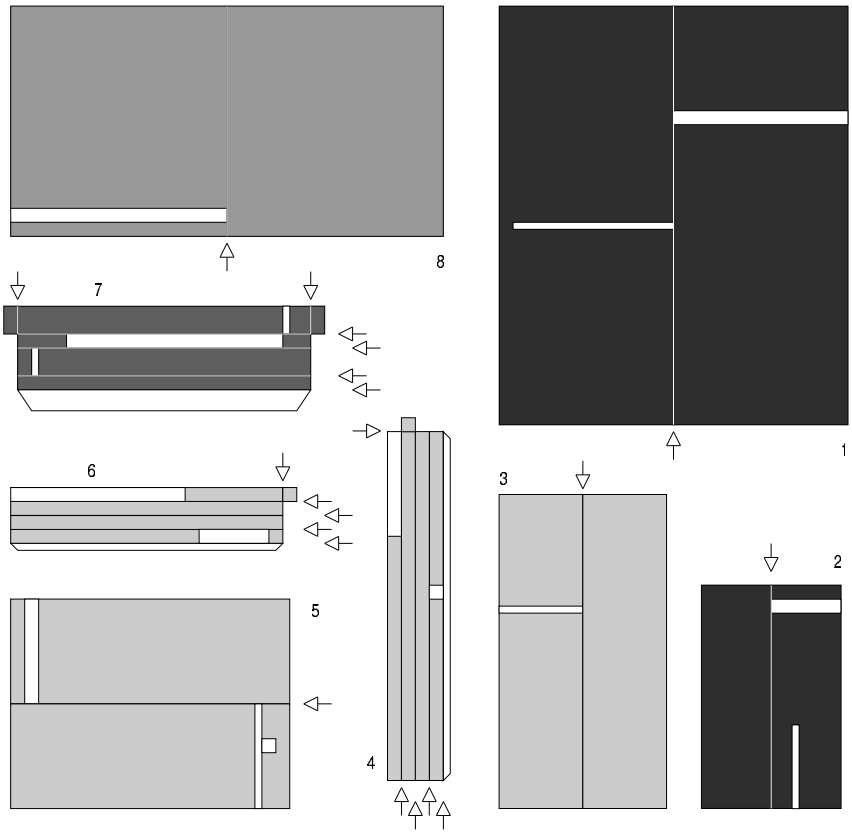

Berlin Chair

Gerrit Rietveld

1924

A cut-out model designed by David Hathaway

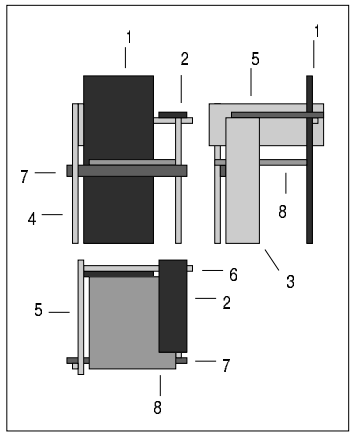

(C) 2000 David Hathaway, All rights reserved

Fold away from printed side

Fold towards printed side

(C) Copyright David Hathaway 1999. All rights reserved.

Name

Street

City

Postcode

State